Work Order ID 107635

September-27-13 1:05:04 PM

107635

Item ID: D3391-023 **Accept** *N900040100* **Setup Start** *NS1*

Revision ID: **Stop** *NS2*

Item Name: Mid Tube Assembly

Start Date: 10/04/13 **Start Qty:** 1.00 *1*

Required Date: 10/04/13 **Req'd Qty:** 1.00 *1*

Cust Item ID:

Customer:

Reference:

Run Start *NR1*

Stop *NR2*

Approvals: **Process Plan:** MLS **Date:** 13-09-30 **Tooling:** **Date:**

QC: **Date:** **SPC (Y/N):** **Date:**

SCRAP

Sequence ID/ Work Center ID	Operation Description	Set Up/ Run Hours	Tool ID	Tool #	Plan Code	Accept Qty	Reject Qty	Reject Number	Insp. Stamp
Draw Nbr	Revision Nbr								
D3391	I								
100		0.00							
100	Skidtubes	10.00							

Skidtubes

Skidtubes

Memo

1-Cut tube to finish length as per Dwg D3391

2-Drill pilot holes using DT8796 (Do not drill "B" holes) and drill only 1 fwd saddle hole on one side only as per Dwg D3391

3-Open saddles and GHW holes to Ø0.375" exept for fwd saddle hole of detail "J"

4-Remove .030" from Fwd indexing Ridge as per Dwg D3391

5-Remove indexing ridge on Fwd & Aft end of skidtube as per Dwg D3391

6-Deburr

7-Drill #30 pilot holes using wearplate Jig DT8217 Identify Ø0.250" holes with paint marker,
***DO NOT DRILL HOLES #3-19-20 FROM FWD END OF JIG

8-Open wearplate holes of D3391-023 assembly detail section G-G to Ø0.250" (10 holes) as per Dwg D3391

9-Open wearplate holes of D3391-023 assembly detail section H-H to Ø0.297" (20 holes) as per Dwg D3391
DO NOT OPEN 2 MOST FWD WEARPLATE HOLES

mm 13/10/07

NCR: Yes / No

WORK ORDER NON-CONFORMANCE / UPDATE

DQA: _____ Date: _____

QA Closed: Date:

Work Order: _____

Part No. _____

NCR No. _____

DISPOSITION

- Rework ☐
- Scrap ☐
- Use-as-is ☐
- Work Order Update ☐

AGAINST DEPARTMENT/PROCESS

- Skid-tube ☐
- Machining ☐
- Thermoforming ☐
- Large Fab ☐
- Crosstube ☐
- Small Fab ☐
- Finishing ☐
- Composite ☐
- Water Jet ☐
- Prod. Eng. Coor. ☐
- Rec/Store/Packaging ☐
- Supplier ☐
- Engineering ☐
- Quality ☐
- Other ☐

Root Cause		Date	Step	Qty	Description of work order update or Non-conformance	Initial Chief Eng	Action Description	Sign & Date	Verification	QC Inspector
Doc/Data	☐									
Equip/Tooling	☐									
Operator	☐									
Material	☐									
Setup	☐									
Other	☐									
Process	☐									
Supplier	☐									
Training	☐									
Unapproved	☐									

FAULT CATEGORY

Landing Gear

- ☐ Bending
- ☐ Centre Not Concentric to O/S
- ☐ Cracks
- ☐ Crushed/Crimped
- ☐ Cuffs
- ☐ Heat Treat
- ☐ Inspection Strip in Tube
- ☐ Ripples in Bend
- ☐ Torque Waves in Extrusion
- ☐ Turning Sequence
- ☐ Wave/Twist in Tube

General

- ☐ Bend
- ☐ BOM/Route
- ☐ Broken/Damaged
- ☐ Burrs
- ☐ Contamination
- ☐ Countersink
- ☐ Cut Too Short
- ☐ Drill Holes
- ☐ Drawing
- ☐ Finish
- ☐ Folio
- ☐ Grain
- ☐ Hardware
- ☐ Inspection Incomplete
- ☐ Instructions Incomplete/Unclear
- ☐ Maintenance
- ☐ Mislabeled
- ☐ Misread
- ☐ Offset
- ☐ Out of Calibration
- ☐ Out of Sequence
- ☐ Outside Dimensions
- ☐ Ovalized
- ☐ Over/Under tolerance
- ☐ Part Incorrect
- ☐ Part Lost/Missing
- ☐ Part Moved
- ☐ Positioned Wrong
- ☐ Power Loss/Surge
- ☐ Pressure/Forced
- ☐ Temperature/Cure
- ☐ Weld
- ☐ Wrong Stock Pulled
- ☐ Other

_____

_____

_____

Item ID: D3391-023 **Accept** *N900040100* **Setup Start** *NS1*
Revision ID: **Stop** *NS2*
Item Name: Mid Tube Assembly

Start Date: 10/04/13 **Start Qty:** 1.00 *1* **Cust Item ID:**
Required Date: 10/04/13 **Req'd Qty:** 1.00 *1* **Customer:**
Reference:

Run Start *NR1*
Stop *NR2*

Approvals: **Process Plan:** _____ **Date:** _____ **Tooling:** _____ **Date:** _____
QC: _____ **Date:** _____ **SPC (Y/N):** _____ **Date:** _____

Sequence ID/ Work Center ID	Operation Description	Set Up/ Run Hours	Tool ID	Tool #	Plan Code	Accept Qty	Reject Qty	Reject Number	Insp. Stamp
	10-Open .375" holes to .438" ***do not open fwd saddle holes***								
	11-Locate D3391-021 in D3391-023 at 9.00" (see view z-z)								
	12- Transfer drill one fwd saddle hole only to .188" dia, transfer drill all remaining fwd saddle holes using DT 8149 locating from previusly drill .188" dia hole, using t-pins and clicos to ensure perfect allingment, open up previusly tranfer drilled pilot holes in D3391-023/-021 to 0.438" dia. in D3391-021								
	13- Using DT8217, locating from two previusly drilled holes, drill remaining wearplate holes into D3391-021.								
	14- Locating from two fwd wearplate holes in D3391-023 drill remaining 6 wearplte holes in D3391-021 using DT8937								
	15- Open 10 wearplate holes in D3391-021 to 0.297" dia.					mm		13/10/07	
	16- insert D3391-021 into D3391-23								
	17- insert T-pins into first and third fwd saddle holes								
	18- ON FIRST SIDE ONLY drill out 2nd and forth fwd saddles holes to 0.500" as per								
	19- ON 2ND SIDE ONLY ream out 2nd and forth saddle hole to 0.499".								
	20-Deburr and blow out all chips from inside tube, scribe batch # in D3391-023 at aft end.								

DQA: _____ Date: _____

NCR: Yes / No

WORK ORDER NON-CONFORMANCE / UPDATE

QA Closed: Date:

Work Order: _____

Part No. _____

NCR No. _____

DISPOSITION

- Rework ☐
- Scrap ☐
- Use-as-is ☐
- Work Order Update ☐

AGAINST DEPARTMENT/PROCESS

- Skid-tube ☐
- Machining ☐
- Thermoforming ☐
- Large Fab ☐
- Crosstube ☐
- Small Fab ☐
- Finishing ☐
- Composite ☐
- Water Jet ☐
- Prod. Eng. Coor. ☐
- Rec/Store/Packaging ☐
- Supplier ☐
- Engineering ☐
- Quality ☐
- Other ☐

Root Cause		Date	Step	Qty	Description of work order update or Non-conformance	Initial Chief Eng	Action Description	Sign & Date	Verification	QC Inspector
Doc/Data	☐									
Equip/Tooling	☐									
Operator	☐									
Material	☐									
Setup	☐									
Other	☐									
Process	☐									
Supplier	☐									
Training	☐									
Unapproved	☐									

FAULT CATEGORY

Landing Gear

- ☐ Bending
- ☐ Centre Not Concentric to O/S
- ☐ Cracks
- ☐ Crushed/Crimped
- ☐ Cuffs
- ☐ Heat Treat
- ☐ Inspection Strip in Tube
- ☐ Ripples in Bend
- ☐ Torque Waves in Extrusion
- ☐ Turning Sequence
- ☐ Wave/Twist in Tube

General

- ☐ Bend
- ☐ BOM/Route
- ☐ Broken/Damaged
- ☐ Burrs
- ☐ Contamination
- ☐ Countersink
- ☐ Cut Too Short
- ☐ Drill Holes
- ☐ Drawing
- ☐ Finish
- ☐ Folio
- ☐ Grain
- ☐ Hardware
- ☐ Inspection Incomplete
- ☐ Instructions Incomplete/Unclear
- ☐ Maintenance
- ☐ Mislabeled
- ☐ Misread
- ☐ Offset
- ☐ Out of Calibration
- ☐ Out of Sequence
- ☐ Outside Dimensions
- ☐ Ovalized
- ☐ Over/Under tolerance
- ☐ Part Incorrect
- ☐ Part Lost/Missing
- ☐ Part Moved
- ☐ Positioned Wrong
- ☐ Power Loss/Surge
- ☐ Pressure/Forced
- ☐ Temperature/Cure
- ☐ Weld
- ☐ Wrong Stock Pulled
- ☐ Other _____

Work Order ID 107635 *107635*

September-27-13 1:05:04 PM

Item ID: D3391-023 **Accept** *N900040100* **Setup Start** *NS1*

Revision ID:

Item Name: Mid Tube Assembly **Stop** *NS2*

Start Date: 10/04/13 **Start Qty:** 1.00 *1* **Cust Item ID:**

Required Date: 10/04/13 **Req'd Qty:** 1.00 *1* **Customer:**

Reference:

Run Start *NR1*

Approvals: **Process Plan:** _____ **Date:** _____ **Tooling:** _____ **Date:** _____

QC: _____ **Date:** _____ **SPC (Y/N):** _____ **Date:** _____

Stop *NR2*

Sequence ID/ Work Center ID	Operation Description	Set Up/ Run Hours	Tool ID	Tool #	Plan Code	Accept Qty	Reject Qty	Reject Number	Insp. Stamp
110 *110* QC Quality Control	QC5- Inspect part completeness to step on W/O	0.00 DAS 27				1			
	Memo	0.00 B 10 21							
120 *120* HandFinish Hand Finishing	Chemical Conversion Coat per QSI005 4.1	0.00				- DC 13/10/21			
	Memo	0.00							
130 *130* QC Quality Control	QC7-Inspect Chemical Conversion Coat	0.00				DAS 03		13-10-21	
	Memo	0.00							

DQA: _____ Date: _____

NCR: Yes / No

WORK ORDER NON-CONFORMANCE / UPDATE

QA Closed: Date:

Work Order: _____

Part No. _____

NCR No. _____

DISPOSITION

- Rework ☐
- Scrap ☐
- Use-as-is ☐
- Work Order Update ☐

AGAINST DEPARTMENT/PROCESS

- Skid-tube ☐
- Machining ☐
- Thermoforming ☐
- Large Fab ☐
- Crosstube ☐
- Small Fab ☐
- Finishing ☐
- Composite ☐
- Water Jet ☐
- Prod. Eng. Coor. ☐
- Rec/Store/Packaging ☐
- Supplier ☐
- Engineering ☐
- Quality ☐
- Other ☐
- ☐

Root Cause		Date	Step	Qty	Description of work order update or Non-conformance	Initial Chief Eng	Action Description	Sign & Date	Verification	QC Inspector
Doc/Data	☐									
Equip/Tooling	☐									
Operator	☐									
Material	☐									
Setup	☐									
Other	☐									
Process	☐									
Supplier	☐									
Training	☐									
Unapproved	☐									

FAULT CATEGORY

Landing Gear

- ☐ Bending
- ☐ Centre Not Concentric to O/S
- ☐ Cracks
- ☐ Crushed/Crimped
- ☐ Cuffs
- ☐ Heat Treat
- ☐ Inspection Strip in Tube
- ☐ Ripples in Bend
- ☐ Torque Waves in Extrusion
- ☐ Turning Sequence
- ☐ Wave/Twist in Tube

General

- ☐ Bend
- ☐ BOM/Route
- ☐ Broken/Damaged
- ☐ Burrs
- ☐ Contamination
- ☐ Countersink
- ☐ Cut Too Short
- ☐ Drill Holes
- ☐ Drawing
- ☐ Finish
- ☐ Folio
- ☐ Grain
- ☐ Hardware
- ☐ Inspection Incomplete
- ☐ Instructions Incomplete/Unclear
- ☐ Maintenance
- ☐ Mislabeled
- ☐ Misread
- ☐ Offset
- ☐ Out of Calibration
- ☐ Out of Sequence
- ☐ Outside Dimensions
- ☐ Ovalized
- ☐ Over/Under tolerance
- ☐ Part Incorrect
- ☐ Part Lost/Missing
- ☐ Part Moved
- ☐ Positioned Wrong
- ☐ Power Loss/Surge
- ☐ Pressure/Forced
- ☐ Temperature/Cure
- ☐ Weld
- ☐ Wrong Stock Pulled
- ☐ Other _____

Work Order ID 107635

September-27-13 1:05:04 PM

107635

Item ID: D3391-023 **Accept** *N900040100* **Setup Start** *NS1*

Revision ID: **Stop** *NS2*

Item Name: Mid Tube Assembly

Start Date: 10/04/13 **Start Qty:** 1.00 *1*

Required Date: 10/04/13 **Req'd Qty:** 1.00 *1*

Reference:

Cust Item ID:

Customer:

Run Start *NR1*

Stop *NR2*

Approvals: **Process Plan:** _____ **Date:** _____ **Tooling:** _____ **Date:** _____

QC: _____ **Date:** _____ **SPC (Y/N):** _____ **Date:** _____

Sequence ID/ Work Center ID	Operation Description	Set Up/ Run Hours	Tool ID	Tool #	Plan Code	Accept Qty	Reject Qty	Reject Number	Insp. Stamp
140		0.00							
140	Skidtubes								
Skidtubes	**Memo**	0.00							
Skidtubes	1-Open float bag holes as per dwg 2-C'sink float bag holes as per dwg 3- Prepare tube for welding 4-Bond web in place as per Dwg D3391 & QSI 015. Adhere for 12 hours) A/R Sikaflex exp: 14/01/29 batch#: 126469 NOTE:ENSURE WEB IS INSERTED IN AFT END OF TUBE								
150	QC5- Inspect part completeness to step on W/O	0.00				1	0	13-10-22	
150									
QC	**Memo**	0.00							
Quality Control									

- DC 13/10/21

DAS 18 9-88

DQA: _____ Date: _____

NCR: Yes / No

WORK ORDER NON-CONFORMANCE / UPDATE

QA Closed: Date:

Work Order: _____

Part No. _____

NCR No. _____

DISPOSITION

- Rework ☐
- Scrap ☐
- Use-as-is ☐
- Work Order Update ☐

AGAINST DEPARTMENT/PROCESS

- Skid-tube ☐
- Machining ☐
- Thermoforming ☐
- Large Fab ☐
- Crosstube ☐
- Small Fab ☐
- Finishing ☐
- Composite ☐
- Water Jet ☐
- Prod. Eng. Coor. ☐
- Rec/Store/Packaging ☐
- Supplier ☐
- Engineering ☐
- Quality ☐
- Other ☐
- ☐

Root Cause		Date	Step	Qty	Description of work order update or Non-conformance	Initial Chief Eng	Action Description	Sign & Date	Verification	QC Inspector
Doc/Data	☐									
Equip/Tooling	☐									
Operator	☐									
Material	☐									
Setup	☐									
Other	☐									
Process	☐									
Supplier	☐									
Training	☐									
Unapproved	☐									

FAULT CATEGORY

Landing Gear

- ☐ Bending
- ☐ Centre Not Concentric to O/S
- ☐ Cracks
- ☐ Crushed/Crimped
- ☐ Cuffs
- ☐ Heat Treat
- ☐ Inspection Strip in Tube
- ☐ Ripples in Bend
- ☐ Torque Waves in Extrusion
- ☐ Turning Sequence
- ☐ Wave/Twist in Tube

General

- ☐ Bend
- ☐ BOM/Route
- ☐ Broken/Damaged
- ☐ Burrs
- ☐ Contamination
- ☐ Countersink
- ☐ Cut Too Short
- ☐ Drill Holes
- ☐ Drawing
- ☐ Finish
- ☐ Folio
- ☐ Grain
- ☐ Hardware
- ☐ Inspection Incomplete
- ☐ Instructions Incomplete/Unclear
- ☐ Maintenance
- ☐ Mislabeled
- ☐ Misread
- ☐ Offset
- ☐ Out of Calibration
- ☐ Out of Sequence
- ☐ Outside Dimensions
- ☐ Ovalized
- ☐ Over/Under tolerance
- ☐ Part Incorrect
- ☐ Part Lost/Missing
- ☐ Part Moved
- ☐ Positioned Wrong
- ☐ Power Loss/Surge
- ☐ Pressure/Forced
- ☐ Temperature/Cure
- ☐ Weld
- ☐ Wrong Stock Pulled
- ☐ Other

_____

_____

_____

Item ID: D3391-023 **Accept** *N900040100* **Setup Start** *NS1*
Revision ID: **Stop** *NS2*
Item Name: Mid Tube Assembly

Start Date: 10/04/13 **Start Qty:** 1.00 *1* **Cust Item ID:**
Required Date: 10/04/13 **Req'd Qty:** 1.00 *1* **Customer:**
Reference:

Run Start *NR1*
Stop *NR2*

Approvals: **Process Plan:** _____ **Date:** _____ **Tooling:** _____ **Date:** _____
QC: _____ **Date:** _____ **SPC (Y/N):** _____ **Date:** _____

Sequence ID/ Work Center ID	Operation Description	Set Up/ Run Hours	Tool ID	Tool #	Plan Code	Accept Qty	Reject Qty	Reject Number	Insp. Stamp
160		0.00							
160	Skidtubes								
Skidtubes	**Memo**	0.00							
Skidtubes	1-Weld crossbolt spacer as per dwg D3391 & QSI 004 AE 13-10-22 2-grind weld flush - DC 13/10/23								
170	QC10- Inspect visual per QSI004- ground welds	0.00	DAS 27 9-89			1			
170									
QC	**Memo**	0.00	13/11/22						
Quality Control									
180	QC5- Inspect part completeness to step on W/O	0.00	DAS 27 9-89			1			
180									
QC	**Memo**	0.00	13/11/22						
Quality Control									

DQA: _____ Date: _____

NCR: Yes / No

WORK ORDER NON-CONFORMANCE / UPDATE

QA Closed: Date:

Work Order: _____

Part No. _____

NCR No. _____

DISPOSITION

Rework ☐
Scrap ☐
Use-as-is ☐
Work Order Update ☐

AGAINST DEPARTMENT/PROCESS

Skid-tube ☐ Crosstube ☐ Water Jet ☐ Engineering ☐
Machining ☐ Small Fab ☐ Prod. Eng. Coor. ☐ Quality ☐
Thermoforming ☐ Finishing ☐ Rec/Store/Packaging ☐ Other ☐
Large Fab ☐ Composite ☐ Supplier ☐

Root Cause	Date	Step	Qty	Description of work order update or Non-conformance	Initial Chief Eng	Action Description	Sign & Date	Verification	QC Inspector
Doc/Data ☐									
Equip/Tooling ☐									
Operator ☐									
Material ☐									
Setup ☐									
Other ☐									
Process ☐									
Supplier ☐									
Training ☐									
Unapproved ☐									

FAULT CATEGORY

Landing Gear

☐ Bending
☐ Centre Not Concentric to O/S
☐ Cracks
☐ Crushed/Crimped
☐ Cuffs
☐ Heat Treat
☐ Inspection Strip in Tube
☐ Ripples in Bend
☐ Torque Waves in Extrusion
☐ Turning Sequence
☐ Wave/Twist in Tube

General

☐ Bend
☐ BOM/Route
☐ Broken/Damaged
☐ Burrs
☐ Contamination
☐ Countersink
☐ Cut Too Short
☐ Drill Holes
☐ Drawing
☐ Finish
☐ Folio

☐ Grain
☐ Hardware
☐ Inspection Incomplete
☐ Instructions Incomplete/Unclear
☐ Maintenance
☐ Mislabeled
☐ Misread
☐ Offset
☐ Out of Calibration
☐ Out of Sequence
☐ Outside Dimensions

☐ Ovalized
☐ Over/Under tolerance
☐ Part Incorrect
☐ Part Lost/Missing
☐ Part Moved
☐ Positioned Wrong
☐ Power Loss/Surge

☐ Pressure/Forced
☐ Temperature/Cure
☐ Weld
☐ Wrong Stock Pulled

☐ Other _____

Item ID: D3391-023 **Accept** *N900040100* **Setup Start** *NS1*
Revision ID: **Stop** *NS2*
Item Name: Mid Tube Assembly
Start Date: 10/04/13 **Start Qty:** 1.00 *1* **Cust Item ID:**
Required Date: 10/04/13 **Req'd Qty:** 1.00 *1* **Customer:**
Reference:

Approvals: **Process Plan:** _____ **Date:** _____ **Tooling:** _____ **Date:** _____ **Run Start** *NR1*
QC: _____ **Date:** _____ **SPC (Y/N):** _____ **Date:** _____ **Stop** *NR2*

Sequence ID/ Work Center ID	Operation Description	Set Up/ Run Hours	Tool ID	Tool #	Plan Code	Accept Qty	Reject Qty	Reject Number	Insp. Stamp
185	Pressure Wash per QSI005 4.3	0.00				1	Ø	13-12-02	DGL
185									
HandFinish	**Memo**	0.00							
Hand Finishing	AND REALODINE AS PER PAR09-043								
190	White Gloss(Ref:4.3.5.1) per QSI005 4.3-Alum M126829.	0.00				1	Ø	13-129.	DAS 34 9-89
190									
Powdercoat	**Memo**	0.00							
Powder Coating	START TIME: 11:25. OVEN TEMPERATURE: 330° FINISH TIME: 11:55.								
200	QC3- Inspect Part Finish	0.00				1	Ø	Ø	AB 13-12-4
200									
QC	**Memo**	0.00							
Quality Control									

DQA: _____ Date: _____

NCR: Yes / No

WORK ORDER NON-CONFORMANCE / UPDATE

QA Closed: Date:

Work Order: _____

Part No. _____

NCR No. _____

DISPOSITION

- Rework ☐
- Scrap ☐
- Use-as-is ☐
- Work Order Update ☐

AGAINST DEPARTMENT/PROCESS

- Skid-tube ☐
- Machining ☐
- Thermoforming ☐
- Large Fab ☐
- Crosstube ☐
- Small Fab ☐
- Finishing ☐
- Composite ☐
- Water Jet ☐
- Prod. Eng. Coor. ☐
- Rec/Store/Packaging ☐
- Supplier ☐
- Engineering ☐
- Quality ☐
- Other ☐

Root Cause		Date	Step	Qty	Description of work order update or Non-conformance	Initial Chief Eng	Action Description	Sign & Date	Verification	QC Inspector
Doc/Data	☐									
Equip/Tooling	☐									
Operator	☐									
Material	☐									
Setup	☐									
Other	☐									
Process	☐									
Supplier	☐									
Training	☐									
Unapproved	☐									

FAULT CATEGORY

Landing Gear

- ☐ Bending
- ☐ Centre Not Concentric to O/S
- ☐ Cracks
- ☐ Crushed/Crimped
- ☐ Cuffs
- ☐ Heat Treat
- ☐ Inspection Strip in Tube
- ☐ Ripples in Bend
- ☐ Torque Waves in Extrusion
- ☐ Turning Sequence
- ☐ Wave/Twist in Tube

General

- ☐ Bend
- ☐ BOM/Route
- ☐ Broken/Damaged
- ☐ Burrs
- ☐ Contamination
- ☐ Countersink
- ☐ Cut Too Short
- ☐ Drill Holes
- ☐ Drawing
- ☐ Finish
- ☐ Folio
- ☐ Grain
- ☐ Hardware
- ☐ Inspection Incomplete
- ☐ Instructions Incomplete/Unclear
- ☐ Maintenance
- ☐ Mislabeled
- ☐ Misread
- ☐ Offset
- ☐ Out of Calibration
- ☐ Out of Sequence
- ☐ Outside Dimensions
- ☐ Ovalized
- ☐ Over/Under tolerance
- ☐ Part Incorrect
- ☐ Part Lost/Missing
- ☐ Part Moved
- ☐ Positioned Wrong
- ☐ Power Loss/Surge
- ☐ Pressure/Forced
- ☐ Temperature/Cure
- ☐ Weld
- ☐ Wrong Stock Pulled
- ☐ Other _____

Item ID: D3391-023 **Accept** *N900040100* **Setup Start** *NS1*
Revision ID: **Stop** *NS2*
Item Name: Mid Tube Assembly

Start Date: 10/04/13 **Start Qty:** 1.00 *1*
Required Date: 10/04/13 **Req'd Qty:** 1.00 *1*
Reference:

Cust Item ID:
Customer:

Run Start *NR1*
Stop *NR2*

Approvals: **Process Plan:** _____ **Date:** _____ **Tooling:** _____ **Date:** _____
QC: _____ **Date:** _____ **SPC (Y/N):** _____ **Date:** _____

Sequence ID/ Work Center ID	Operation Description	Set Up/ Run Hours	Tool ID	Tool #	Plan Code	Accept Qty	Reject Qty	Reject Number	Insp. Stamp
230		0.00							
230	HandFinishing								
HandFinish	**Memo**	0.00							
Hand Finishing	✓ 1- press fit D3591-1 spacers using DT9416 starting from 0.500" side								
	✓ 2-Install Inserts as per Dwg								
240	QC5- Inspect part completeness to step on W/O	0.00							
240									
QC	**Memo**	0.00							
Quality Control									
250	Identify as per dwg & Stock Location:_____	0.00							
250									
Packaging	**Memo**	0.00							
Packaging									

NCR: Yes / No

WORK ORDER NON-CONFORMANCE / UPDATE

DQA: [signature] Date: 14/01/29

QA Closed: [signature] Date: 14/1/29

Work Order: 107635

Part No. D3391-023

NCR No. 14-3468

DISPOSITION

- Rework [ ]
- Scrap [X]
- Use-as-is [ ]
- Work Order Update [ ]

AGAINST DEPARTMENT/PROCESS

Skid-tube	[X]	Crosstube	[ ]	Water Jet	[ ]	Engineering	[ ]
Machining	[ ]	Small Fab	[ ]	Prod. Eng. Coor.	[ ]	Quality	[ ]
Thermoforming	[ ]	Finishing	[ ]	Rec/Store/Packaging	[ ]	Other	[ ]
Large Fab	[ ]	Composite	[ ]	Supplier	[ ]		[ ]

Root Cause	Date	Step	Qty	Description of work order update or Non-conformance	Initial Chief Eng	Action Description	Sign & Date	Verification	QC Inspector
Doc/Data [ ] Equip/Tooling [ ] Operator [ ] Material [ ] Setup [ ] Other [ ] Process [ ] Supplier [ ] Training [ ] Unapproved [ ]	14/01/21	# 230	+1	Found at Assembly that the 4th hole From Fwd Saddle is Drilled off and won't Allow the saddle to align. RC Tooling	[signature] JAN 20 2014	Unable to Re work Parts. Scrap + Destroy $700.86	17777 14/01/27	[signature] 14-1-27	DAS 16 9-89 14/01/24

FAULT CATEGORY

Landing Gear	General			
[ ] Bending	[ ] Bend	[ ] Grain	[ ] Ovalized	[ ] Pressure/Forced
[ ] Centre Not Concentric to O/S	[ ] BOM/Route	[ ] Hardware	[ ] Over/Under tolerance	[ ] Temperature/Cure
[ ] Cracks	[ ] Broken/Damaged	[ ] Inspection Incomplete	[ ] Part Incorrect	[ ] Weld
[ ] Crushed/Crimped	[ ] Burrs	[ ] Instructions Incomplete/Unclear	[ ] Part Lost/Missing	[ ] Wrong Stock Pulled
[ ] Cuffs	[ ] Contamination	[ ] Maintenance	[ ] Part Moved	
[ ] Heat Treat	[ ] Countersink	[ ] Mislabeled	[ ] Positioned Wrong	
[ ] Inspection Strip in Tube	[ ] Cut Too Short	[ ] Misread	[ ] Power Loss/Surge	[ ] Other
[ ] Ripples in Bend	[ ] Drill Holes	[ ] Offset		
[ ] Torque Waves in Extrusion	[ ] Drawing	[ ] Out of Calibration		
[ ] Turning Sequence	[ ] Finish	[ ] Out of Sequence		
[ ] Wave/Twist in Tube	[ ] Folio	[ ] Outside Dimensions		

Work Order ID 107635

September-27-13 1:05:04 PM

107635

Item ID: D3391-023 **Accept** *N900040100* **Setup Start** *NS1*

Revision ID: **Stop** *NS2*

Item Name: Mid Tube Assembly

Start Date: 10/04/13 **Start Qty:** 1.00 *1* **Cust Item ID:**

Required Date: 10/04/13 **Req'd Qty:** 1.00 *1* **Customer:**

Reference:

Run Start *NR1*

Stop *NR2*

Approvals: **Process Plan:** _____ **Date:** _____ **Tooling:** _____ **Date:** _____

QC: _____ **Date:** _____ **SPC (Y/N):** _____ **Date:** _____

Sequence ID/ Work Center ID	Operation Description	Set Up/ Run Hours	Tool ID	Tool #	Plan Code	Accept Qty	Reject Qty	Reject Number	Insp. Stamp
260	QC21- Final Inspection - Work Order Release	0.00							
260									
QC	**Memo**	0.00							
Quality Control									

14-01-27

CLOSED AT 0

SCRAPPED.

DQA: _____ Date: _____

NCR: Yes / No

WORK ORDER NON-CONFORMANCE / UPDATE

QA Closed: Date:

Work Order: _____

Part No. _____

NCR No. _____

DISPOSITION

- Rework ☐
- Scrap ☐
- Use-as-is ☐
- Work Order Update ☐

AGAINST DEPARTMENT/PROCESS

- Skid-tube ☐
- Machining ☐
- Thermoforming ☐
- Large Fab ☐
- Crosstube ☐
- Small Fab ☐
- Finishing ☐
- Composite ☐
- Water Jet ☐
- Prod. Eng. Coor. ☐
- Rec/Store/Packaging ☐
- Supplier ☐
- Engineering ☐
- Quality ☐
- Other ☐

Root Cause		Date	Step	Qty	Description of work order update or Non-conformance	Initial Chief Eng	Action Description	Sign & Date	Verification	QC Inspector
Doc/Data	☐									
Equip/Tooling	☐									
Operator	☐									
Material	☐									
Setup	☐									
Other	☐									
Process	☐									
Supplier	☐									
Training	☐									
Unapproved	☐									

FAULT CATEGORY

Landing Gear

- ☐ Bending
- ☐ Centre Not Concentric to O/S
- ☐ Cracks
- ☐ Crushed/Crimped
- ☐ Cuffs
- ☐ Heat Treat
- ☐ Inspection Strip in Tube
- ☐ Ripples in Bend
- ☐ Torque Waves in Extrusion
- ☐ Turning Sequence
- ☐ Wave/Twist in Tube

General

- ☐ Bend
- ☐ BOM/Route
- ☐ Broken/Damaged
- ☐ Burrs
- ☐ Contamination
- ☐ Countersink
- ☐ Cut Too Short
- ☐ Drill Holes
- ☐ Drawing
- ☐ Finish
- ☐ Folio
- ☐ Grain
- ☐ Hardware
- ☐ Inspection Incomplete
- ☐ Instructions Incomplete/Unclear
- ☐ Maintenance
- ☐ Mislabeled
- ☐ Misread
- ☐ Offset
- ☐ Out of Calibration
- ☐ Out of Sequence
- ☐ Outside Dimensions
- ☐ Ovalized
- ☐ Over/Under tolerance
- ☐ Part Incorrect
- ☐ Part Lost/Missing
- ☐ Part Moved
- ☐ Positioned Wrong
- ☐ Power Loss/Surge
- ☐ Pressure/Forced
- ☐ Temperature/Cure
- ☐ Weld
- ☐ Wrong Stock Pulled
- ☐ Other

_____

_____

_____

Picklist Print

September-27-13 1:05:03 PM

Work Order ID: 107635

Parent Item: D3391-023 **Start Date:** 10/04/13 **Required Date:** 10/04/13

Parent Item Name: Mid Tube Assembly **Start Qty:** 1.00 **Required Qty:** 1.00

Comments:
IPP A05.10.20New Issue KJ/EC
IPP B06.02.10ECN773 dwg rev.D EC
IPP C 07.03.20 rev F dwg EC
IPP D 07.03.28 re-format EC
IPP E 07.10.31 ecn 1053P EC
IPP Rev:F ECN 1056 07-11-13 DD verified by: EC
IPP Rev:G 08-09-08 new process (ecn 08-510) DD verified by:EC
IPP Rev:H 08-09-10 revH as per dwg DD verified by:EC
IPP Rev: I 08-11-13 Removed steps per w/o, QC KJ verified by: ec IPP Rev:J add in seq 140
expire date &b# sikaflex DD 10.02.17 verified by:EC

Component Item ID/ Item Name	Replacement Item ID	Mfg/ Purch	Bin Item	Primary Location	Last Location	Route Seq ID	Unit of Measure	Qty on Hand	Qty per Kit	Total Qty	Qty Issued	Date Issued	Status
D2500-1-100 Skidtube Extrusion		Manufactured	No			100	Each	110.0000	1	1		mm 13/10/07	
				Location		**Loc Qty**		**Loc Code**					
				HALL		110							
				82373		30							
				86065		80							
D3391-021 Fwd Tube Assembly		Manufactured	No	B94628		100	Each	0.0000	1	1		mm 13/10/07	
D3389-1 Web		Manufactured	No			140	Each	10.0000	1	1		DE 13 10/21	
				Location		**Loc Qty**		**Loc Code**					
				LG		10							
					102375	4							
					103732	1							
					104968	4							
					85508	1							

DQA: _____ Date: _____

NCR: Yes / No

WORK ORDER NON-CONFORMANCE / UPDATE

QA Closed: Date:

Work Order: _____

Part No. _____

NCR No. _____

DISPOSITION

- Rework ☐
- Scrap ☐
- Use-as-is ☐
- Work Order Update ☐

AGAINST DEPARTMENT/PROCESS

- Skid-tube ☐
- Machining ☐
- Thermoforming ☐
- Large Fab ☐
- Crosstube ☐
- Small Fab ☐
- Finishing ☐
- Composite ☐
- Water Jet ☐
- Prod. Eng. Coor. ☐
- Rec/Store/Packaging ☐
- Supplier ☐
- Engineering ☐
- Quality ☐
- Other ☐

Root Cause		Date	Step	Qty	Description of work order update or Non-conformance	Initial Chief Eng	Action Description	Sign & Date	Verification	QC Inspector
Doc/Data	☐									
Equip/Tooling	☐									
Operator	☐									
Material	☐									
Setup	☐									
Other	☐									
Process	☐									
Supplier	☐									
Training	☐									
Unapproved	☐									

FAULT CATEGORY

Landing Gear

- ☐ Bending
- ☐ Centre Not Concentric to O/S
- ☐ Cracks
- ☐ Crushed/Crimped
- ☐ Cuffs
- ☐ Heat Treat
- ☐ Inspection Strip in Tube
- ☐ Ripples in Bend
- ☐ Torque Waves in Extrusion
- ☐ Turning Sequence
- ☐ Wave/Twist in Tube

General

- ☐ Bend
- ☐ BOM/Route
- ☐ Broken/Damaged
- ☐ Burrs
- ☐ Contamination
- ☐ Countersink
- ☐ Cut Too Short
- ☐ Drill Holes
- ☐ Drawing
- ☐ Finish
- ☐ Folio
- ☐ Grain
- ☐ Hardware
- ☐ Inspection Incomplete
- ☐ Instructions Incomplete/Unclear
- ☐ Maintenance
- ☐ Mislabeled
- ☐ Misread
- ☐ Offset
- ☐ Out of Calibration
- ☐ Out of Sequence
- ☐ Outside Dimensions
- ☐ Ovalized
- ☐ Over/Under tolerance
- ☐ Part Incorrect
- ☐ Part Lost/Missing
- ☐ Part Moved
- ☐ Positioned Wrong
- ☐ Power Loss/Surge
- ☐ Pressure/Forced
- ☐ Temperature/Cure
- ☐ Weld
- ☐ Wrong Stock Pulled
- ☐ Other _____

Picklist Print

September-27-13 1:05:03 PM

Work Order ID: 107635
Parent Item: D3391-023
Parent Item Name: Mid Tube Assembly

Start Date: 10/04/13 **Required Date:** 10/04/13
Start Qty: 1.00 **Required Qty:** 1.00

D3681-1 Spacer	Manufactured	No		160	Each	259.0000	5	5 BE13-102

Location		Loc Qty	Loc Code	
LG		246		
	101754	3		
	102202	131		
	104856	110		5
	93371	2		
LG001		10		
	68958	2		
	69893	2		
	71845	2		
	74874	1		
	76004	1		
	77501	2		
LG005		3		
	80361	1		
	87611	2		

D3591-1 Bushing	Manufactured	No			Each	72.0000	2	14/01/21

Location		Loc Qty	Loc Code	
FG		10		
	92873	10		
FP001		62		
	100699	62		V2

DQA: _____ Date: _____

NCR: Yes / No

WORK ORDER NON-CONFORMANCE / UPDATE

QA Closed: Date:

Work Order: _____

Part No. _____

NCR No. _____

DISPOSITION

- Rework ☐
- Scrap ☐
- Use-as-is ☐
- Work Order Update ☐

AGAINST DEPARTMENT/PROCESS

- Skid-tube ☐
- Machining ☐
- Thermoforming ☐
- Large Fab ☐
- Crosstube ☐
- Small Fab ☐
- Finishing ☐
- Composite ☐
- Water Jet ☐
- Prod. Eng. Coor. ☐
- Rec/Store/Packaging ☐
- Supplier ☐
- Engineering ☐
- Quality ☐
- Other ☐

Root Cause		Date	Step	Qty	Description of work order update or Non-conformance	Initial Chief Eng	Action Description	Sign & Date	Verification	QC Inspector
Doc/Data	☐									
Equip/Tooling	☐									
Operator	☐									
Material	☐									
Setup	☐									
Other	☐									
Process	☐									
Supplier	☐									
Training	☐									
Unapproved	☐									

FAULT CATEGORY

Landing Gear

- ☐ Bending
- ☐ Centre Not Concentric to O/S
- ☐ Cracks
- ☐ Crushed/Crimped
- ☐ Cuffs
- ☐ Heat Treat
- ☐ Inspection Strip in Tube
- ☐ Ripples in Bend
- ☐ Torque Waves in Extrusion
- ☐ Turning Sequence
- ☐ Wave/Twist in Tube

General

- ☐ Bend
- ☐ BOM/Route
- ☐ Broken/Damaged
- ☐ Burrs
- ☐ Contamination
- ☐ Countersink
- ☐ Cut Too Short
- ☐ Drill Holes
- ☐ Drawing
- ☐ Finish
- ☐ Folio
- ☐ Grain
- ☐ Hardware
- ☐ Inspection Incomplete
- ☐ Instructions Incomplete/Unclear
- ☐ Maintenance
- ☐ Mislabeled
- ☐ Misread
- ☐ Offset
- ☐ Out of Calibration
- ☐ Out of Sequence
- ☐ Outside Dimensions
- ☐ Ovalized
- ☐ Over/Under tolerance
- ☐ Part Incorrect
- ☐ Part Lost/Missing
- ☐ Part Moved
- ☐ Positioned Wrong
- ☐ Power Loss/Surge
- ☐ Pressure/Forced
- ☐ Temperature/Cure
- ☐ Weld
- ☐ Wrong Stock Pulled
- ☐ Other

_____

_____

_____

Picklist Print

September-27-13 1:05:03 PM

Work Order ID: **107635**

Parent Item: **D3391-023** **Start Date:** 10/04/13 **Required Date:** 10/04/13

Parent Item Name: Mid Tube Assembly **Start Qty:** 1.00 **Required Qty:** 1.00

ALS4-1032-130 Rivnut	Purchased	No		230	Each	2,441.0000	**20**	20	reload 2C

Location		Loc Qty	Loc Code	
FP001		389	M127028	x20
	119084	116		
	120671	89		
	120807	36		
	120837	8		
	121269	140		
ST279		40		
	124080	40		
st510		2012		
	124163	160		
	M126109	1852		

NCR: Yes / No

WORK ORDER NON-CONFORMANCE / UPDATE

DQA: _____ Date: _____

QA Closed: Date:

Work Order: _____

Part No. _____

NCR No. _____

DISPOSITION

- Rework ☐
- Scrap ☐
- Use-as-is ☐
- Work Order Update ☐

AGAINST DEPARTMENT/PROCESS

- Skid-tube ☐
- Machining ☐
- Thermoforming ☐
- Large Fab ☐
- Crosstube ☐
- Small Fab ☐
- Finishing ☐
- Composite ☐
- Water Jet ☐
- Prod. Eng. Coor. ☐
- Rec/Store/Packaging ☐
- Supplier ☐
- Engineering ☐
- Quality ☐
- Other ☐

Root Cause		Date	Step	Qty	Description of work order update or Non-conformance	Initial Chief Eng	Action Description	Sign & Date	Verification	QC Inspector
Doc/Data	☐									
Equip/Tooling	☐									
Operator	☐									
Material	☐									
Setup	☐									
Other	☐									
Process	☐									
Supplier	☐									
Training	☐									
Unapproved	☐									

FAULT CATEGORY

Landing Gear

- ☐ Bending
- ☐ Centre Not Concentric to O/S
- ☐ Cracks
- ☐ Crushed/Crimped
- ☐ Cuffs
- ☐ Heat Treat
- ☐ Inspection Strip in Tube
- ☐ Ripples in Bend
- ☐ Torque Waves in Extrusion
- ☐ Turning Sequence
- ☐ Wave/Twist in Tube

General

- ☐ Bend
- ☐ BOM/Route
- ☐ Broken/Damaged
- ☐ Burrs
- ☐ Contamination
- ☐ Countersink
- ☐ Cut Too Short
- ☐ Drill Holes
- ☐ Drawing
- ☐ Finish
- ☐ Folio
- ☐ Grain
- ☐ Hardware
- ☐ Inspection Incomplete
- ☐ Instructions Incomplete/Unclear
- ☐ Maintenance
- ☐ Mislabeled
- ☐ Misread
- ☐ Offset
- ☐ Out of Calibration
- ☐ Out of Sequence
- ☐ Outside Dimensions
- ☐ Ovalized
- ☐ Over/Under tolerance
- ☐ Part Incorrect
- ☐ Part Lost/Missing
- ☐ Part Moved
- ☐ Positioned Wrong
- ☐ Power Loss/Surge
- ☐ Pressure/Forced
- ☐ Temperature/Cure
- ☐ Weld
- ☐ Wrong Stock Pulled
- ☐ Other

_____

_____

_____

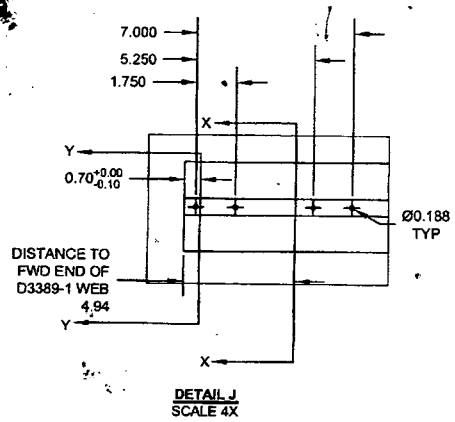

DETAIL J
SCALE 4X

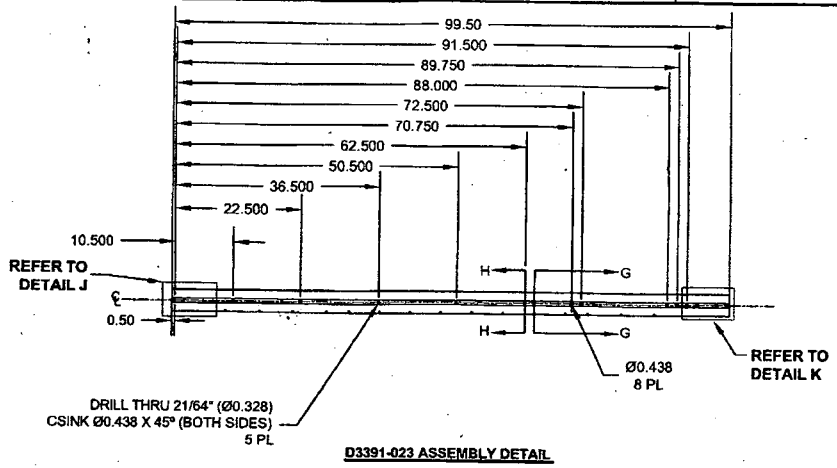

D3391-023 ASSEMBLY DETAIL

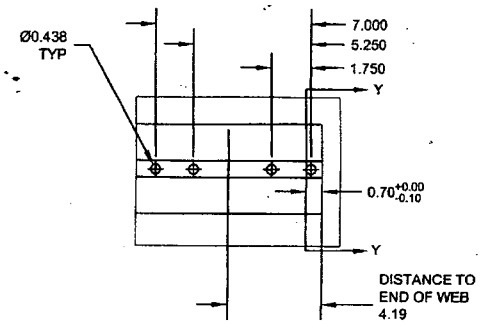

DETAIL K
SCALE 4X

SECTION G-G
SCALE 5X

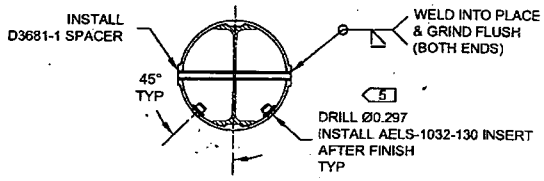

SECTION H-H
SCALE 5X
5 PL

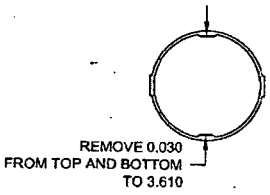

SECTION X-X
SCALE 5X

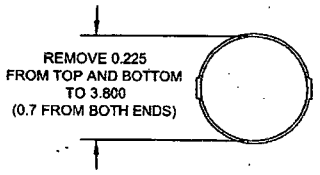

SECTION Y-Y
SCALE 5X

D3391-023 MID TUBE ASSEMBLY PARTS LIST

QTY - 023	PART NUMBER	DESCRIPTION
X	D3391-023	MID TUBE ASSEMBLY
1	D2500-1-100	EXTRUSION
1	D3389-1	WEB
5	D3681-1	SPACER
20	AELS-1032-130	INSERT

D3391-023 MID TUBE ASSEMBLY

1) MATERIAL: MAKE FROM D2500-1-100 EXTRUSION
2) INSTALL D3389-1 WEB TO OUTER TUBE USING SIKAFLEX-241/-291 PER QSI 015
3) WELDING: PER DART QSI 004

RELEASED
2011-11-04

DESIGN	PH	DART AEROSPACE USA, INC KENT, WA
DRAWN	XDF	
CHECKED		DRAWING NO. D3391 REV. I
MFG. APPR.		SHEET 6 OF 8
APPROVED		TITLE 412 FLOAT SKIDTUBE SCALE NTS
DE APPR.		
DATE	11.10.13	

COPYRIGHT © 2005 BY DART AEROSPACE USA, INC
THIS DOCUMENT IS PRIVATE AND CONFIDENTIAL AND IS SUPPLIED ON THE EXPRESS CONDITION THAT IT IS NOT TO BE USED FOR ANY PURPOSE OR COPIED OR COMMUNICATED TO ANY OTHER PERSON WITHOUT WRITTEN PERMISSION FROM DART AEROSPACE USA, INC.

107635 MLJ
13-09-30

NO. 327

AWS D17.1.2001
QUALIFICATION TEST RECORD

Name: Barclay Elliott
Job #: 104694
Part #: D3391-013
Description: ~~H9 skid tube~~ Mid tube
Welding Process: Tig[✓] Mig[ ]
Base materiel: Aluminium
Current: AC[✓] DC[ ]

TEST REQUIREMENTS AND RESULTS

Visual:	pass[✓] fail[ ]
Incomplete Penetration:	pass[✓] fail[ ]
Incomplete Fusion:	pass[✓] fail[ ]
Cracks:	pass[✓] fail[ ]
Overlap (cold lap)	pass[✓] fail[ ]
Undercut:	pass[✓] fail[ ]
Pin holes:	pass[✓] fail[ ]
Porosity (surface):	pass[✓] fail[ ]
Coloration:	pass[✓] fail[ ]
Burn through:	pass[✓] fail[ ]

Qualifier DAS 09 & 89 **Date of Test Coupon** 13-08-22

Welder Barclay Elliott **Date of Test Coupon** 13-08-22

The above named individual is qualified in accordance with AWS D17.1.2001 to weld